Designation: D4145 – 10

Standard Test Method for Coating Flexibility of Prepainted Sheet[1]

This standard is issued under the fixed designation D4145; the number immediately following the designation indicates the year of original adoption or, in the case of revision, the year of last revision. A number in parentheses indicates the year of last reapproval. A superscript epsilon (ε) indicates an editorial change since the last revision or reapproval.

1. Scope

1.1 This test method describes a procedure for determining the flexibility and adhesion of organic coatings (paints) on metallic substrates that are deformed by bending when the sheet is fabricated into building panels or other products.

1.2 The metal substrate must be capable of passing this test without fracturing and with no excessive grain development.

1.3 The values stated in inch-pound units are to be regarded as standard. The values given in parentheses are mathematical conversions to SI units that are provided for information only and are not considered standard.

1.4 *This standard does not purport to address all of the safety concerns, if any, associated with its use. It is the responsibility of the user of this standard to establish appropriate safety and health practices and determine the applicability of regulatory limitations prior to use.*

2. Terminology

2.1 *Definitions of Terms Specific to This Standard:*

2.1.1 *T-bend, n*—a description of the severity of a bend in terms of the gauge or thickness (t) of the sheet to which the coating has been applied; *as used in this test method*, the T-bend rating is the minimum number of thicknesses of metal around which the coated sheet is bent (Fig. 1), or if bent around a die, the number of thicknesses of metal equivalent to the diameter of the die to achieve no fracture or removal of the coating.

3. Summary of Test Method

3.1 Prepainted panels are bent 180° around progressively more thicknesses of metal or larger diameter dies, the end point being when failures no longer occur. The panels may be examined with or without low magnification (5 to 10×) after each bend in order to determine if the coating fractured (cracked). If loss of adhesion or pickoff is to be determined, this examination shall occur after performing a tape pull-off test.

4. Significance and Use

4.1 Organic coatings on precoated sheet are subjected to stresses when fabricated into products by roll forming, brake bending, or other deformation processes. These stresses can exceed the flexibility or adhesive strength of the coating, resulting in fracture of the coating which exposes the substrate, or in the loss of adhesion of the coating to the substrate. This test is a means of evaluating the ability of a coating system to withstand the stresses of fabrication.

4.2 The bend direction, whether the axis of bend is transverse to or along the rolling direction of the metal, and the temperature of the specimen when it is bent can affect the results of this test and should be agreed upon between the supplier and the user.

5. Apparatus

5.1 A means of holding one end of the specimen rigidly while making the bend is needed. Damage to the coating while making the bend must be avoided. Various bending tools such as a vise with smooth jaws or with smooth inserts, a bend forming tool (Fig. 2), a brake press (Fig. 3) or a combination of tools have been found to be satisfactory.

5.2 If the metal is not bent around itself as in Fig. 1, a series of bending dies with smoothly rounded ends may be used as guides around which the specimen is bent (Fig. 4).

5.3 *Bend Forming Tool.*

5.3.1 A manual or automated operation forming tool capable of facilitating the T-bending of a sample may be used. An arbor press with an appropriate fixed V-shaped die and moveable wedge has been found to be satisfactory for this purpose.

5.4 *Magnifier.*

5.4.1 A magnifier capable of 5 to 10× magnification for examining the specimen for coating fracture and pickoff after testing. A stereomicroscope has been found useful for this purpose.

5.5 *Clear Adhesive Tape.*

6. Procedure

6.1 *Bending the Coated Specimen Around Itself:*

6.1.1 The coated specimen shall be at least 2 in. (50 mm) across the bend direction, by a length sufficient to make the required number of bends. A 2 by 6-in. (50 by 150-mm) size is

[1] This test method is under the jurisdiction of ASTM Committee D01 on Paint and Related Coatings, Materials, and Applications and is the direct responsibility of Subcommittee D01.53 on Coil Coated Metal.

Current edition approved June 1, 2010. Published August 2010. Originally approved in 1983. Last previous edition approved in 2002 as D4145 – 83 (2002). DOI: 10.1520/D4145-10.

Copyright © ASTM International, 100 Barr Harbor Drive, PO Box C700, West Conshohocken, PA 19428-2959. United States

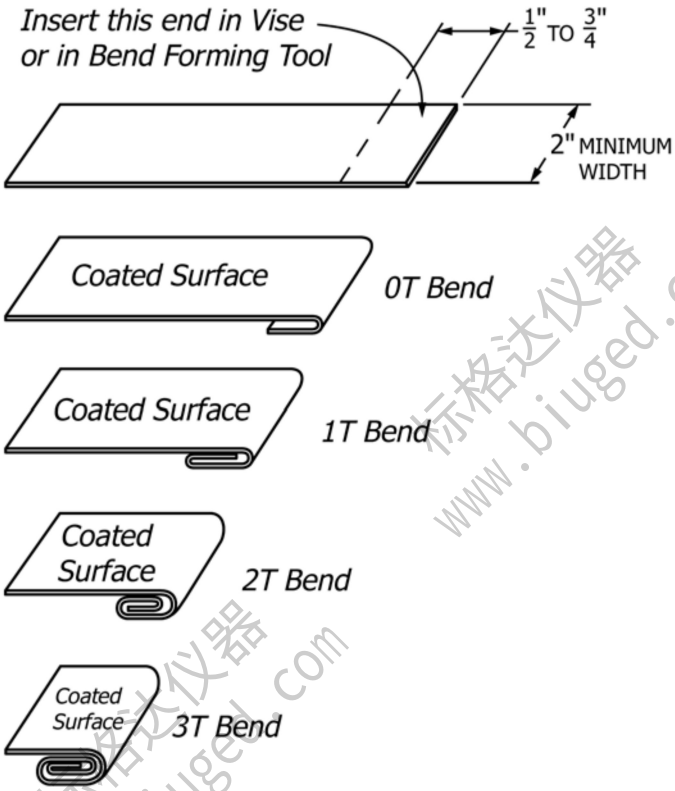

NOTE 1—The above bends are expanded for clarity. They are actually flat against themselves in the test.

FIG. 1 T-Bend Test in Which the Coated Specimen is Bent Around Itself

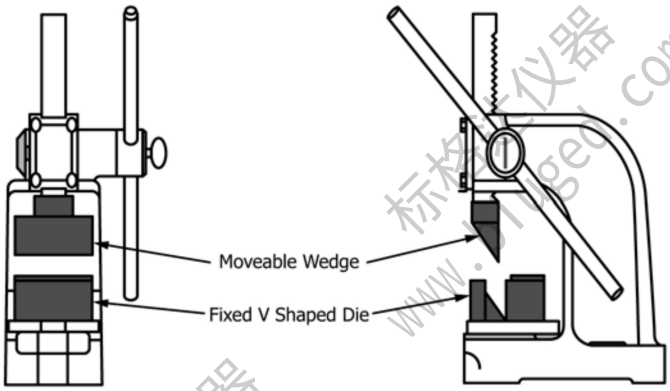

FIG. 2 Bend Forming Tool for Performing T-Bends

FIG. 3 Brake Press

convenient. The specimen shall be held at 75 ± 10°F (24 ± 5.5°C) temperature, or as agreed upon between purchaser and

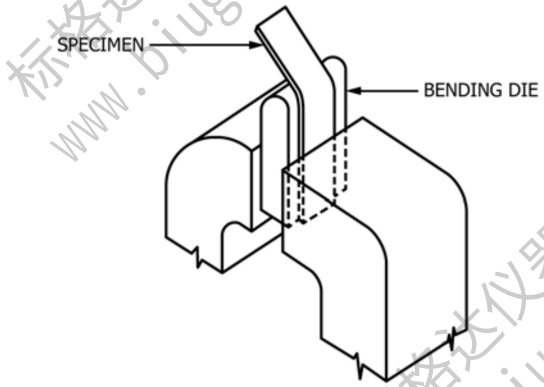

FIG. 4 T-Bend Test Using a Die Around Which the Specimen is Bent

seller. The bend direction will be longitudinal or in the same direction with respect to the rolling or flow direction of the sheet, or as agreed upon between purchaser and seller.

NOTE 1—A triangle-shaped specimen (Fig. 5) has been found convenient for making T-bend tests. This shape leaves a portion of each bend exposed for later examination and for a permanent record.

NOTE 2—A longitudinal bend is in the same direction with respect to and along the rolling or flow direction. A transverse bend is perpendicular to and across the rolling or flow direction.

6.1.2 Secure between 0.25 and 0.75 in. (6 and 20 mm) of one end of the specimen in a vise or holding jig as shown in Fig. 1. Bend the free end of the specimen 90° in a smooth and uniform manner so that the coating to be examined is on the outside of the specimen after bending.

6.1.3 Continue to bend the specimen until the bent end can be inserted in the jaws of the vise. Tighten the vise to complete the 180° bend, which is called an OT bend. Take care to tighten the vise sufficiently so that the apex of the bend is as flat as can be reasonably achieved.

6.1.4 Examine the bend for cracks in the coating, visually or with low power magnification, or both.

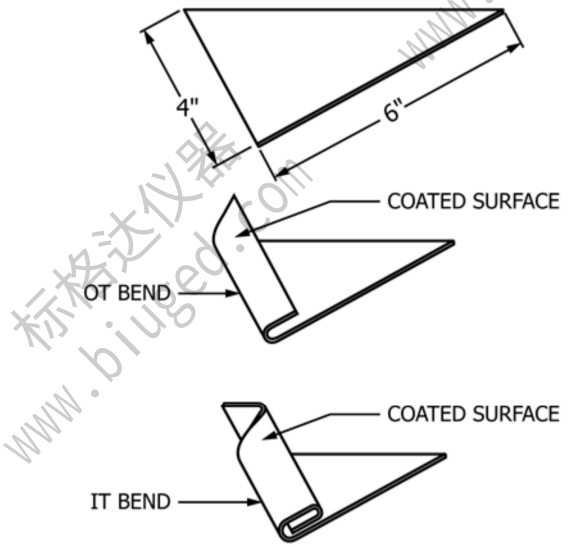

NOTE 1—The above bends are expanded for clarity. They are actually flat against themselves in the test.

FIG. 5 Triangular Specimen for T-Bend Test

6.1.5 Apply pressure-sensitive tape along the bend. Rub the tape flat; then, holding the specimen firmly, remove the tape with a rapid movement at an angle of approximately 90°, or perpendicular to the bend surface. Examine the tape for coating removed from the surface of the specimen (that is, pickoff). In the case of a metallic coated steel specimen (for example, galvanized steel), examine the tape to determine whether pickoff is between the organic coating and the metallic surface or between the metallic coating and the base steel.

6.1.6 Secure the bent end of the specimen in the vise and bend the free end 90°. Continue to bend the free end around the first (OT) bend to complete a 180° bend, and tighten in the vise as before. This makes a 1T bend (Fig. 1). Examine the coating and perform the tape test for cracking and pickoff, as with the OT bend.

6.1.7 Repeat this procedure, making a 2T, 3T, etc., bends until no cracking or pickoff occurs. The number of the t-bend at which no cracking or pickoff occurs is the designated successful t-bend level.

6.2 *Bending the Coated Specimen Around a Die:*

6.2.1 The coated specimen shall be at least 2 in. (50 mm) across the bend direction.

6.2.2 Secure the specimen and bending die in a vise or holding jig (Fig. 4). Bend the specimen 180° around the die in a smooth and uniform manner.

6.2.3 Examine the bend for cracking as in 6.1.4 and for pick-off or loss of adhesion, or both, as in 6.1.5.

6.2.4 Express the T-bend at which no cracking or no pickoff occurs as the number of specimen thicknesses around which the metal is being bent equal to the thickness of the die.

6.3 *Bending the Coated Specimen Around Itself Using a Bend Forming Tool:*

6.3.1 The coated specimen shall be at least 2 in. (50 mm) across the bend direction, by a length sufficient to make the required number of bends. A 2 by 10-in. (50 by 254-mm) size is convenient. A wider specimen may be used, limited by die width. The specimen shall be held at 75 ± 10°F (24 ± 5.5°C) temperature, or as agreed on between purchaser and seller. The bend direction will be longitudinal or in the same direction with respect to the rolling or flow direction of the sheet, or as agreed on between purchaser and seller.

6.3.2 Secure about 0.25 to 0.75 (6 to 20 mm) of one end of the specimen, as shown in Fig. 1, to the step in the fixed portion of the holding jig or forming tool. Depress the free end of the specimen into the fixed V-shaped die by the moveable wedge in a smooth and uniform manner so that the coating is on the outside of the specimen after it is bent.

6.3.3 Insert the bent end between the fixed V-shaped die and moveable wedge of the forming tool. Depress the specimen, as in a vise in 6.1.3, to complete the 180° bend, which is called an OT bend. Take care to tighten the specimen between the fixed V-shaped die and moveable wedge of the forming tool sufficiently so that the apex of the bend is as flat as can be reasonably achieved.

6.3.4 Examine the bend for cracking as in 6.1.4 or for loss of adhesion as in 6.1.5.

6.3.5 Secure the bent end of the specimen in the fixed portion of the holding jig or forming tool and depress into the fixed V-shaped die by the moveable wedge. Continue to bend the free end around the first (OT) bend to complete a 180° bend, and then tighten between the fixed V-shaped die and moveable wedge of the forming tool as before. This makes a 1T bend (Fig. 1). Examine and by taping for cracking and pickoff, as with the OT bend.

6.3.6 Repeat this procedure, making a 2T, 3T, etc., bends until no cracking or pickoff occurs.

7. Report

7.1 Report the following information:

7.1.1 Identification of the material, such as coil number, metal thickness, grade, alloy, temper and location within the coil if the sample was coated on a coil line,

7.1.2 The coating system, coating thickness, application and curing conditions,

7.1.3 The temperature at which the specimen is bent,

7.1.4 The bend direction—whether across (transverse) or along (longitudinal) the rolling direction of the sheet,

7.1.5 The minimum T-bend with no pickoff nor paint fracture (cracking) or any observed metal failure or metal cracking, and

7.1.6 Whether judged visually or under (what power of) magnification.

8. Precision [2]

8.1 On the basis of an interlaboratory study of this test method, in which two operators in each of five laboratories tested panels coated with paints of different flexibility and adhesion, the standard deviation was found to be:

	Standard Deviation	
	Aluminum	Galvanized Steel
T-bend to no fracture	0.55	1.33
T-bend to no pickoff	0.76	2.09

8.2 Based on these standard deviations, the following criteria should be used to judge the acceptability of results at the 95 % confidence level:

8.2.1 *Repeatability*—Measurements obtained by two operators in a single laboratory should be considered suspect if they differ by more than:

	Aluminum	Galvanized Steel
T-bend to no fracture	0.4	1.8
T-bend to no pickoff	0.9	3.3

8.2.2 *Reproducibility*—Two measurements obtained in different laboratories, each the mean of measurements made by two operators within a laboratory, should be considered suspect if they differ by more than:

	Aluminum	Galvanized Steel
T-bend to no fracture	2.5	10.1
T-bend to no pickoff	1.8	10.6

9. Keywords

9.1 coating flexibility; prepainted sheet; T-bend flexibility

[2] Supporting data have been filed at ASTM International Headquarters and may be obtained by requesting Research Report RR:D01-1034. Contact ASTM Customer Service at service@astm.org.

ASTM International takes no position respecting the validity of any patent rights asserted in connection with any item mentioned in this standard. Users of this standard are expressly advised that determination of the validity of any such patent rights, and the risk of infringement of such rights, are entirely their own responsibility.

This standard is subject to revision at any time by the responsible technical committee and must be reviewed every five years and if not revised, either reapproved or withdrawn. Your comments are invited either for revision of this standard or for additional standards and should be addressed to ASTM International Headquarters. Your comments will receive careful consideration at a meeting of the responsible technical committee, which you may attend. If you feel that your comments have not received a fair hearing you should make your views known to the ASTM Committee on Standards, at the address shown below.

This standard is copyrighted by ASTM International, 100 Barr Harbor Drive, PO Box C700, West Conshohocken, PA 19428-2959, United States. Individual reprints (single or multiple copies) of this standard may be obtained by contacting ASTM at the above address or at 610-832-9585 (phone), 610-832-9555 (fax), or service@astm.org (e-mail); or through the ASTM website (www.astm.org). Permission rights to photocopy the standard may also be secured from the Copyright Clearance Center, 222 Rosewood Drive, Danvers, MA 01923, Tel: (978) 646-2600; http://www.copyright.com/

标格达仪器
www.biuged.com