Designation: D5068 – 04 (Reapproved 2013)

Standard Practice for Preparation of Paint Brushes for Evaluation[1]

This standard is issued under the fixed designation D5068; the number immediately following the designation indicates the year of original adoption or, in the case of revision, the year of last revision. A number in parentheses indicates the year of last reapproval. A superscript epsilon (ε) indicates an editorial change since the last revision or reapproval.

1. Scope

1.1 This practice describes the preparation of paint brushes for evaluation.

1.2 This practice is applicable to paint brushes 50 to 100 mm (2 to 4 in.) in width.

1.3 The values stated in SI units are to be regarded as the standard. The values given in parentheses are for information only.

1.4 *This standard does not purport to address the safety concerns, if any, associated with its use. It is the responsibility of the user of this standard to establish appropriate safety and health practices and determine the applicability of regulatory limitations prior to use.*

2. Referenced Documents

2.1 *ASTM Standards:*[2]

D3924 Specification for Environment for Conditioning and Testing Paint, Varnish, Lacquer, and Related Materials

D5301 Practice for Physical Characterization of Paint Brushes

3. Summary of Practice

3.1 Using a paint chosen for the evaluation, the brush to be tested is repeatedly loaded with paint and brushed over a specified area in a specified application time.

4. Significance and Use

4.1 Until the paint brush is fully conditioned and wetted with paint, only part of the paint loaded onto the brush can be transferred to the surface being painted. By properly preparing the brush before use, the amount of paint delivered to the surface can be made more uniform and reflect real use.

5. Apparatus

5.1 *Container,* to hold paint, for example, a quart can.

5.2 *Test Brush,* 50 to 100 mm (2 to 4 in.) in width.

5.3 *Balance,* to weigh brush to the nearest 0.1 gram.

6. Materials

6.1 *Test Paint.*

6.2 *Brush-Out Panels,* or other typical panels to be used.[3]

6.3 *Masking Tape,* to secure the panel to a flat surface.

7. Procedure

7.1 All tests are to be conducted in an atmosphere having a temperature of 23 ± 2°C (73.5 ± 3.5°F) and a relative humidity of 50 ± 5 % (see Specification D3924).

7.2 Record weight of the test brush before loading (W1) using the example format as a guide (see Table 1). Place brush out panel on scale and tare.

7.3 Dip the brush into the specified paint to one-half the length of the filament.

NOTE 1—It is very important to assure that the depth that the brush filaments are dipped into the paint is consistent from brushout to brushout. To aid in determining the depth to dip the filaments, a tongue depressor or other guide for the specified length can be taped to the brush ferrule.

7.4 Hold the brush at the specified depth in the paint for 10 s. Remove and hold the brush vertically for 30 s allowing any excess paint to drain back into the paint can.

7.5 Secure the brush-out panel with masking tape to a flat, smooth, horizontal surface.

7.6 After the drain period, immediately place brush on a tared brush-out panel and weigh. Record the brush weight loaded with paint (W2). Record the amount of paint picked up by the brush as A, where A = W2–W1. Apply paint to the specified initial area on the brush-out panel as indicated below:

Brush Width, mm (in.)	Initial Area, (cm^2)
50 and 62.5 (2 and 2 ½)	250
75 and 100 (3 and 4)	500

[1] This practice is under the jurisdiction of ASTM Committee D01 on Paint and Related Coatings, Materials, and Applications and is the direct responsibility of Subcommittee D01.61 on Paint Application Tools.

Current edition approved June 1, 2013. Published June 2013. Originally approved in 1990. Last previous edition approved in 2009 as D5068 – 04 (2009). DOI: 10.1520/D5068-04R13.

[2] For referenced ASTM standards, visit the ASTM website, www.astm.org, or contact ASTM Customer Service at service@astm.org. For *Annual Book of ASTM Standards* volume information, refer to the standard's Document Summary page on the ASTM website.

[3] Any smooth type panel can be used. A Leneta 8H-BW Chart, available from The Leneta Co., 15 Whitney Road, Mahaw, N.J. 07430 has been used in round robin testing for this purpose.

Copyright © ASTM International, 100 Barr Harbor Drive, PO Box C700, West Conshohocken, PA 19428-2959. United States

TABLE 1 Example Calculation

		Initial Break-In	Break-In 1	Break-In 2	Break-In 3	Break-In 4	Break-In 5
Brush Weight before Loading, grams	W1	65.5	73.1	75.4			
Brush Weight Loaded w/Paint	W2	74.7	77.4	79.0			
Net Paint Weight Pick Up	A	9.3	4.3	3.6			
Brush Weight after Painting	W3	73.1	75.4	77.2			
Net Paint Discharged	B	1.6	2.0	1.8			
Cum Paint Weight Pick Up	C	9.3	11.9	13.5			
Difference in Pick Up	D	9.3	2.7	1.6			
% Additional Pick Up versus Time	P	100.0	22.4	11.8			

7.7 Application time shall be 15 s for 50 to 62.5-mm (2 to 2 ½ in.) brushes or 20 s for the 75 to 100-mm (3 to 4 in.) brushes.

7.8 Keep the angle of the handle and displacement of the filaments of the test brush uniform throughout the entire series. When applying paint, displace the test brush filaments about one third to one half of the filament length and maintain the handle somewhat perpendicular to the paint-out surface. When applying paint, always start in the middle of the area to be painted. This leaves the excess paint in the middle where it is easiest to spread to the area being covered and will result in a more uniform coverage (see Fig. 1).

7.9 After application, immediately record the weight of the brush (W3). Record the amount of paint discharged by the brush as B, where B = W2−W3.

7.10 Repeat this procedure using new brush-out panels, but the same brush. Do not clean brush between break-in procedures. Determine the amount of paint picked up by the brush (A) and amount of paint discharged (B) after the second immersion.

7.11 Calculate the difference in weight pick-up (D) by subtracting the difference between W2 from the second (or n + 1) application from W2 from the first (or n) application.

7.12 Calculate the total cumulative paint pick-up (C) for each subsequent brushout by adding the cumulative paint from the previous break-in (C) and the difference in weight pick-up (D) from the next break-in.

7.13 Determine the percent additional pick-up versus total pick-up (P) using the following equation:

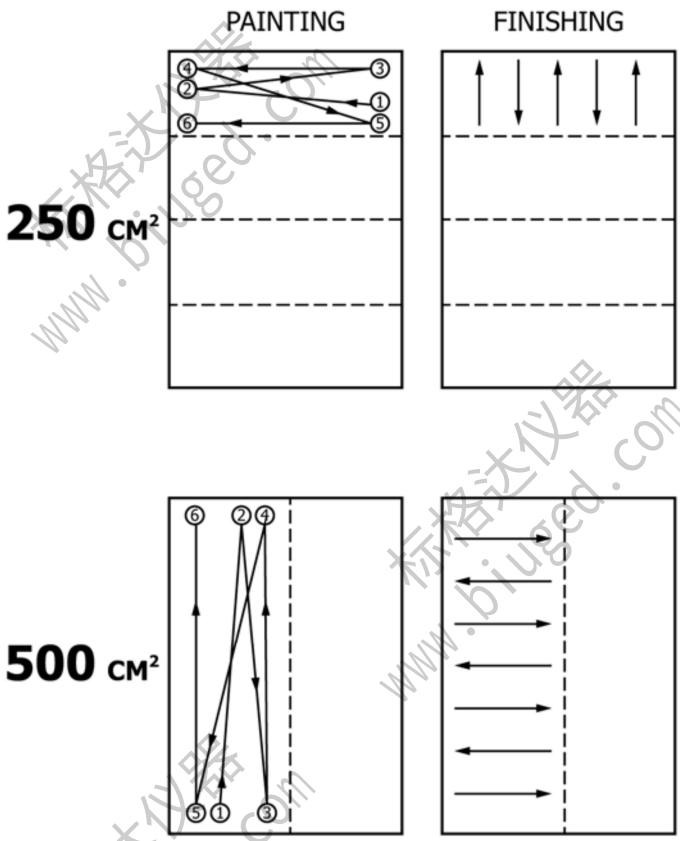

FIG. 1 Paint Application

$$\% \ Additional \ Pick - up \ (P) = D/C \times 100 \quad (1)$$

7.14 A brush is considered conditioned only when the percent additional pick-up is less than 20 %. Typically this will require three to four break-in procedures.

8. Keywords

8.1 paint brush evaluation

APPENDIX

(Nonmandatory Information)

X1. CHOICE OF BRUSH USED IN LABORATORY BRUSHOUT TESTS

X1.1 The choice of brush used in a laboratory test involving brushouts to evaluate various paint properties such as leveling or hiding can have a profound effect on the results obtained. Applicators can begin to understand about the probable performance of a brush by reviewing Practice D5301. Brush performance is affected by the way that the filament tips are shaped such as flat, dome shaped or chiseled to a tip or flagged, or both, and level or tapered. Filaments come in a variety of shapes and compositions. Always use a high quality paint brush when performing any laboratory tests.

ASTM International takes no position respecting the validity of any patent rights asserted in connection with any item mentioned in this standard. Users of this standard are expressly advised that determination of the validity of any such patent rights, and the risk of infringement of such rights, are entirely their own responsibility.

This standard is subject to revision at any time by the responsible technical committee and must be reviewed every five years and if not revised, either reapproved or withdrawn. Your comments are invited either for revision of this standard or for additional standards and should be addressed to ASTM International Headquarters. Your comments will receive careful consideration at a meeting of the responsible technical committee, which you may attend. If you feel that your comments have not received a fair hearing you should make your views known to the ASTM Committee on Standards, at the address shown below.

This standard is copyrighted by ASTM International, 100 Barr Harbor Drive, PO Box C700, West Conshohocken, PA 19428-2959, United States. Individual reprints (single or multiple copies) of this standard may be obtained by contacting ASTM at the above address or at 610-832-9585 (phone), 610-832-9555 (fax), or service@astm.org (e-mail); or through the ASTM website (www.astm.org). Permission rights to photocopy the standard may also be secured from the Copyright Clearance Center, 222 Rosewood Drive, Danvers, MA 01923, Tel: (978) 646-2600; http://www.copyright.com/

标格达仪器
www.biuged.com