Designation: D1200 – 10 (Reapproved 2014)

Standard Test Method for Viscosity by Ford Viscosity Cup[1]

This standard is issued under the fixed designation D1200; the number immediately following the designation indicates the year of original adoption or, in the case of revision, the year of last revision. A number in parentheses indicates the year of last reapproval. A superscript epsilon (ε) indicates an editorial change since the last revision or reapproval.

This standard has been approved for use by agencies of the U.S. Department of Defense.

1. Scope

1.1 This test method covers the determination of the viscosity of Newtonian or near-Newtonian paints, varnishes, lacquers, and related liquid materials with the Ford-type efflux viscosity cup. If the material is non-Newtonian, that is, shear-thinning or thixotropic, Test Method D2196 should be used.

1.2 The values stated in SI units are to be regarded as the standard. The values given in parentheses are for information only.

1.3 *This standard does not purport to address all of the safety concerns, if any, associated with its use. It is the responsibility of the user of this standard to establish appropriate safety and health practices and determine the applicability of regulatory limitations prior to use.*

2. Referenced Documents

2.1 *ASTM Standards:*[2]

D2196 Test Methods for Rheological Properties of Non-Newtonian Materials by Rotational (Brookfield type) Viscometer

E1 Specification for ASTM Liquid-in-Glass Thermometers

3. Terminology

3.1 *Definitions:*

3.1.1 *Newtonian liquid, n*—a liquid in which the viscosity is independent of the shear stress or shear rate. If the ratio of shear stress to shear rate is not constant, the liquid is non-Newtonian.

3.1.2 *Near-Newtonian liquid, n*—a liquid in which the variation of viscosity with shear rate is small and the effect on viscosity of mechanical disturbances such as stirring is negligible.

4. Summary of Test Method

4.1 The Ford viscosity cup is filled level full with the liquid under test, and the time for the material to flow through one of the standard orifices is measured.

5. Significance and Use

5.1 This test method is useful for the determination of package and application viscosities of a number of paints and other coatings and in the thinning of these materials, but is limited to Newtonian or near-Newtonian liquids.

5.2 There are other types of apparatus for measuring viscosity in the laboratory that produce more accurate results.

6. Apparatus

6.1 *Ford Viscosity Cups*—Nos. 1, 2, 3, 4, and 5 Ford viscosity cups made of corrosion- and solvent-resistant materials assembled as complete units (Note 1), and conforming to the dimensional requirements shown in Fig. 1. The orifice dimensions are considered as a guide only as the combination of cup and orifice dimensions must permit conformance to the flow formula for each cup as listed in the Appendix.

NOTE 1—If the orifice is removed from the cup for any reason the cup should be recalibrated before use as described in the Appendix.

6.2 *Thermometer*—Saybolt Viscosity Thermometer conforming to the requirements for Thermometer 17C (19 to 27°C) or 17F (66 to 80°F) as prescribed in Specification E1. In addition, temperature measuring devices such as non-mercury liquid-in-glass thermometers, thermocouples, or platinum resistance thermometers that provide equivalent or better accuracy and precision, that cover the temperature range for thermometer 17C and 17F, may be used.

6.3 *Timing Device*—Any timing device may be used providing that the readings can be taken with a discrimination of 0.2 s or better.

7. Test Specimen

7.1 The specimen of the material to be tested shall be visibly homogeneous and free of any foreign material or air bubbles.

8. Temperature of Testing

8.1 All measurements with the Ford viscosity cups shall be made at 25°C (77°F) or a temperature agreed upon between

[1] This test method is under the jurisdiction of ASTM Committee D01 on Paint and Related Coatings, Materials, and Applications and is the direct responsibility of Subcommittee D01.24 on Physical Properties of Liquid Paints and Paint Materials.

Current edition approved Dec. 1, 2014. Published December 2014. Originally approved in 1952. Last previous edition approved in 2010 as D1200 – 10. DOI: 10.1520/D1200-10R14.

[2] For referenced ASTM standards, visit the ASTM website, www.astm.org, or contact ASTM Customer Service at service@astm.org. For *Annual Book of ASTM Standards* volume information, refer to the standard's Document Summary page on the ASTM website.

Copyright © ASTM International, 100 Barr Harbor Drive, PO Box C700, West Conshohocken, PA 19428-2959. United States

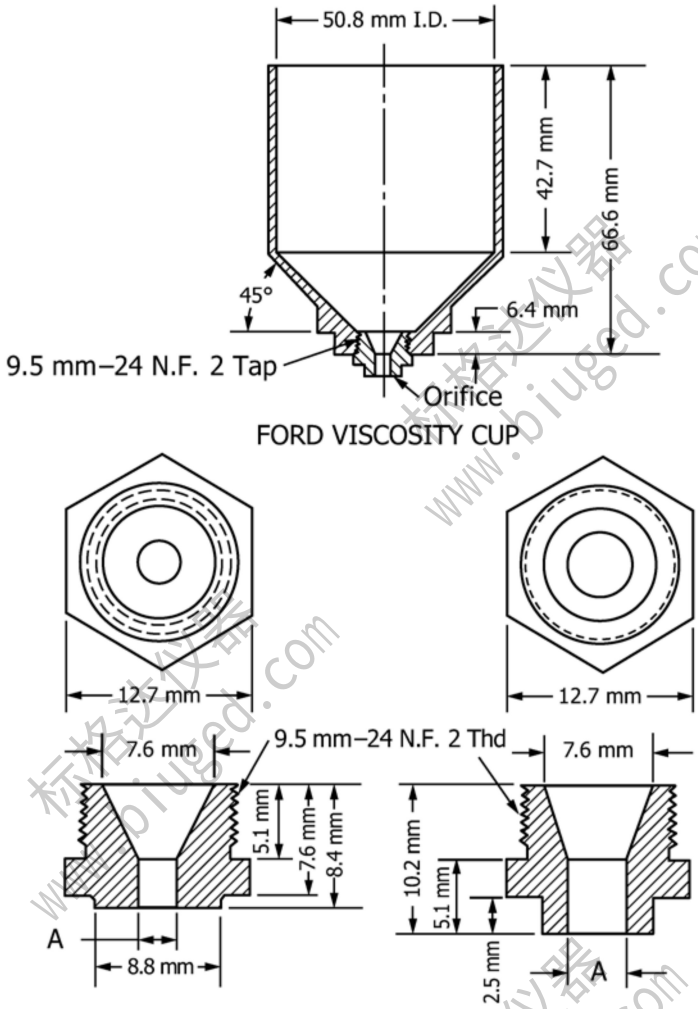

Orifice	A, mm	Orifice	A, mm
No. 1	1.90	No. 3	3.40
No. 2	2.53	No. 4	4.12
		No. 5	5.20

FIG. 1 Ford Viscosity Cup and Orifices

producer and user. Temperature drift during the test should be kept to a minimum and should not exceed ±0.2°C (±0.4°F).

NOTE 2— It is impossible to predict the effect of temperature change on each material with which the apparatus may be used. This factor may be less than 1 % per degree Celsius for some liquids whereas others may be as high as 8 to 10 % per degree Celsius.

9. Calibration

9.1 Cups should be calibrated in accordance with the procedure described in Appendix X1. The frequency of this calibration check depends upon the amount of use and the care that the individual cup receives. If the cup varies more than 10 % from standard, it should not be used.

10. Conditioning

10.1 Bring the material to a temperature a few degrees below that desired and then agitate vigorously for 10 min on a reciprocating shaker in a pint can two-thirds full. Allow to stand undisturbed for 10 min while adjusting further to the desired temperature. Make the viscosity determination at the end of the 10-min period.

11. Procedure

11.1 Make viscosity determinations in a room free of drafts and rapid changes in temperature. For the highest degree of precision the room temperature should be between 22 and 28°C (72 and 82°F). Determinations should be made at a temperature above the dew point of the atmosphere surrounding the apparatus.

11.2 Choose the proper cup so that the time of efflux will be between 20 and 100 s (preferably between 30 and 100 s) for cup Nos. 3, 4, and 5; between 55 and 100 s for cup No. 1; and between 40 and 100 s for cup No. 2 (Fig. 2).

11.3 Level the instrument so that a cup may be filled level full without a meniscus or overflow at one side.

11.4 Determine the time in seconds of efflux as follows: Close the orifice, for example, by holding a rubber stopper against it. Fill the cup with the prepared specimen. The preferred method is to overfill the cup and scrape off the excess with a straightedge. Pull the stopper away and simultaneously start the timing device. Measure the time until the first break in the stream.

11.5 Measure the temperature of the fluid in the efflux stream.

11.6 If the cup has been established to be nonstandard when calibrated as described in the Appendix, apply the percent difference to the measured seconds to get the corrected viscosity in Ford-cup seconds.

12. Care of Cup

12.1 Following each determination, clean the cup by the use of a suitable solvent and a soft brush. Under no conditions should metal cleaning tools be brought into contact with the instrument. Particular care must be exercised in cleaning the orifice to avoid any film deposit or nicks on the inside walls.

13. Report

13.1 Report the following information:

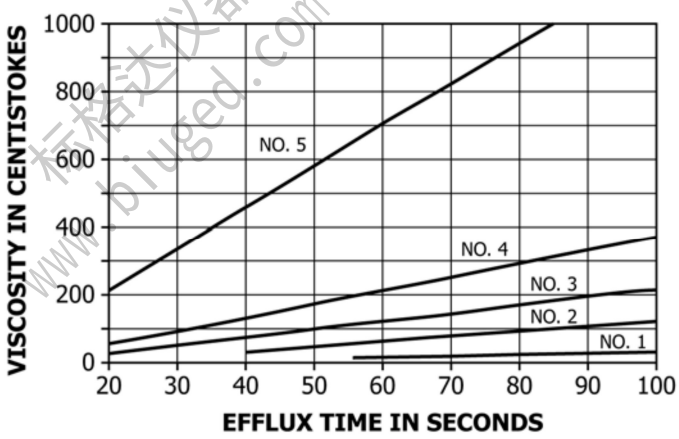

FIG. 2 Approximate Viscosity Curves for Ford Cups

13.1.1 The efflux time to the nearest 0.2 s for the cup orifice combination (for example, viscosity 33.2 s with No. 4 Ford cup), the temperature of the test specimen (as in the efflux stream), and the immediate history of agitation and rest prior to the measurement.

14. Precision and Bias

14.1 *Precision*—On the basis of an interlaboratory test of this test method in which eight cooperators from four different laboratories made measurements on five different paints, the within-laboratory coefficient of variation was found to be 2.8 % with 35 df and the between-laboratory coefficient of variation was found to be 6.9 % with 30 df. Based on these coefficients, the following criteria should be used for judging the acceptability of results at the 95 % confidence level:

14.1.1 *Repeatability*—Two results obtained by the same operator on different days should be considered suspect if they differ by more than 8 %.

14.1.2 *Reproducibility*—Two results obtained by operators in different laboratories should be considered suspect if they differ by more than 20 %.

14.2 *Bias*—Since there is no accepted reference material suitable for determining bias for the procedure in this test method, bias cannot be determined.

15. Keywords

15.1 flow cup; Ford cup; viscometers—Ford

APPENDIX

(Nonmandatory Information)

X1. Calibration Procedure for Ford Cups

X1.1 The orifice of the Ford cup is commonly made of brass or some other corrosion-resistant material which is subject to wear with use and cleaning. A small change in diameter of the orifice becomes significant in the results obtained with the use of this type of viscosity-measuring apparatus.

TABLE X1.1 Viscosity Standards Recommended for Calibrating Ford Viscosity Cups

Cup Number	Approximate Cup Viscosity Range, cSt	Standard Oil Designation	Approximate Designated Viscosity at 77°F (25°C), cSt[A]
1	10 to 35	S-10	20
2	25 to 120	S-20	35
3	49 to 220	S-60	120
4	70 to 370	S-60	120
5	200 to 1200	S-200	460

[A] Exact viscosities are supplied with the oil samples.

X1.2 The viscosity standards[3] are available only as 1-pt samples.

[3] Certified kinematic viscosity standards are available from the Cannon Instrument Co., P.O. Box 16, State College, Pa. 16801. For particular oils applicable for use with the Ford Cups refer to Table X1.1. Oils available from other sources, having known kinematic viscosities, may also be used.

X1.3 Select the appropriate liquid viscosity standard for the cup to be calibrated (see Table X1.1). Bring this cup and the liquid viscosity standard to a constant temperature as close as possible to 25.0°C (77.0°F) or to the operating temperature of the cup. Determine the time of efflux to the nearest 0.2 s using the procedure detailed in Section 11. Keep the temperature drift to within ±0.2°C (±0.4°F). If the temperature is not 77°F, the actual temperature must be noted and the viscosity of the standard oil corrected to this temperature.

X1.4 The following formulas are used to convert the time of flow in seconds, t, to kinematic viscosity V:

$$V_1 = 0.49\ (t - 35.0)$$
$$V_2 = 1.44\ (t - 18.0)$$
$$V_3 = 2.31\ (t - 6.58)$$
$$V_4 = 3.85\ (t - 4.49)$$
$$V_5 = 12.1\ (t - 2.00)$$

where V_1, V_2, V_3, V_4, and V_5 = kinematic viscosity using orifice No. 1, 2, 3, 4, and 5, respectively, cSt.

X1.5 The difference between the certified viscosity and the determined viscosity, multiplied by 100 and divided by the certified viscosity, will give the percent variation of the cup from standard. A percent correction can be applied to the seconds flow when the cup is in normal use. If the cup varies more than 10 % from standard, it is recommended that the orifice be replaced and that the cup be recalibrated.